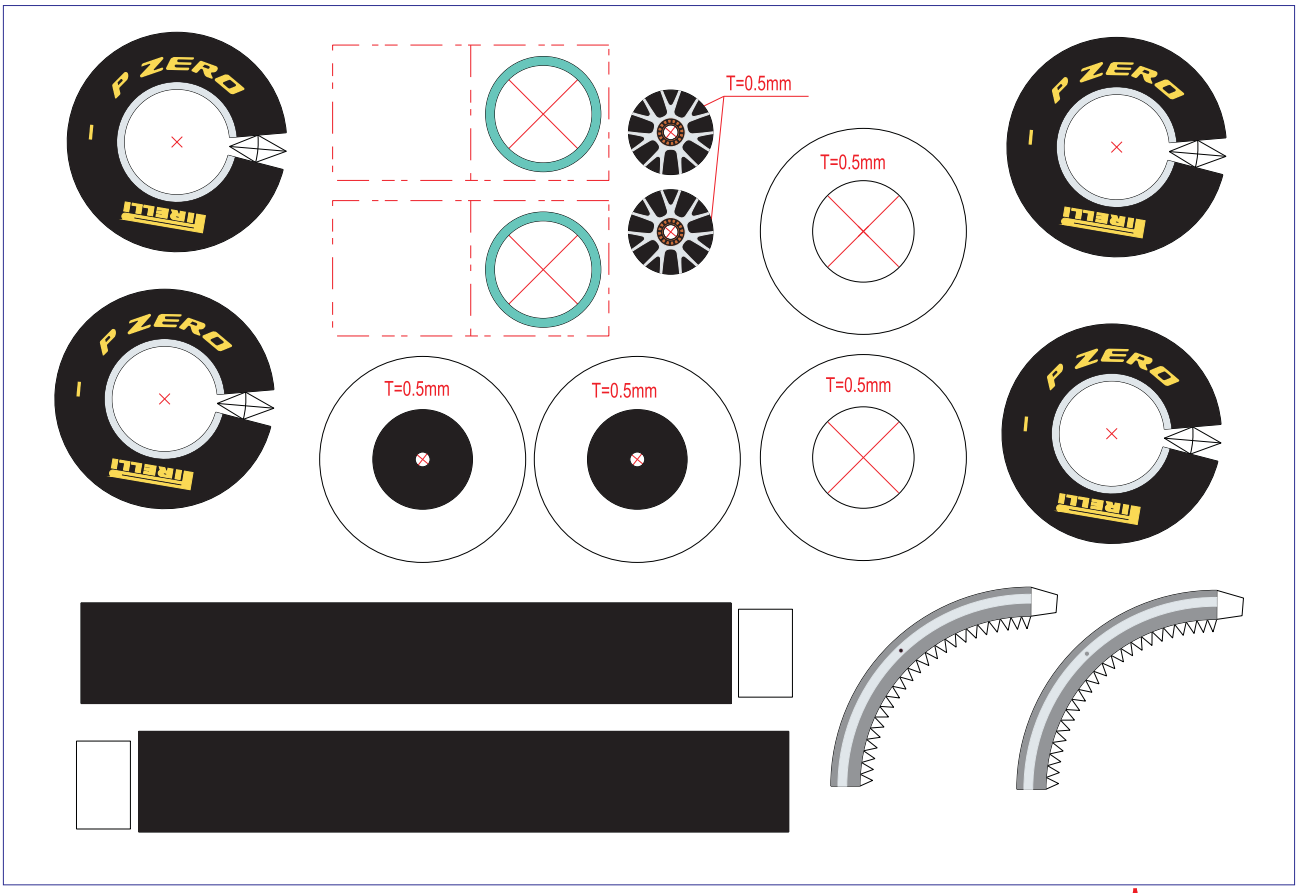
T=0.5mm
T=0.5mm
T=0.5mm
T=0.5mm
T=0.5mm

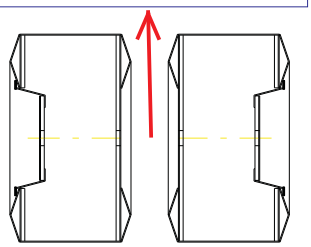

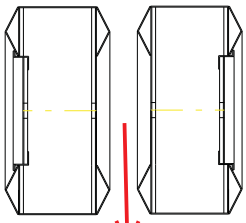

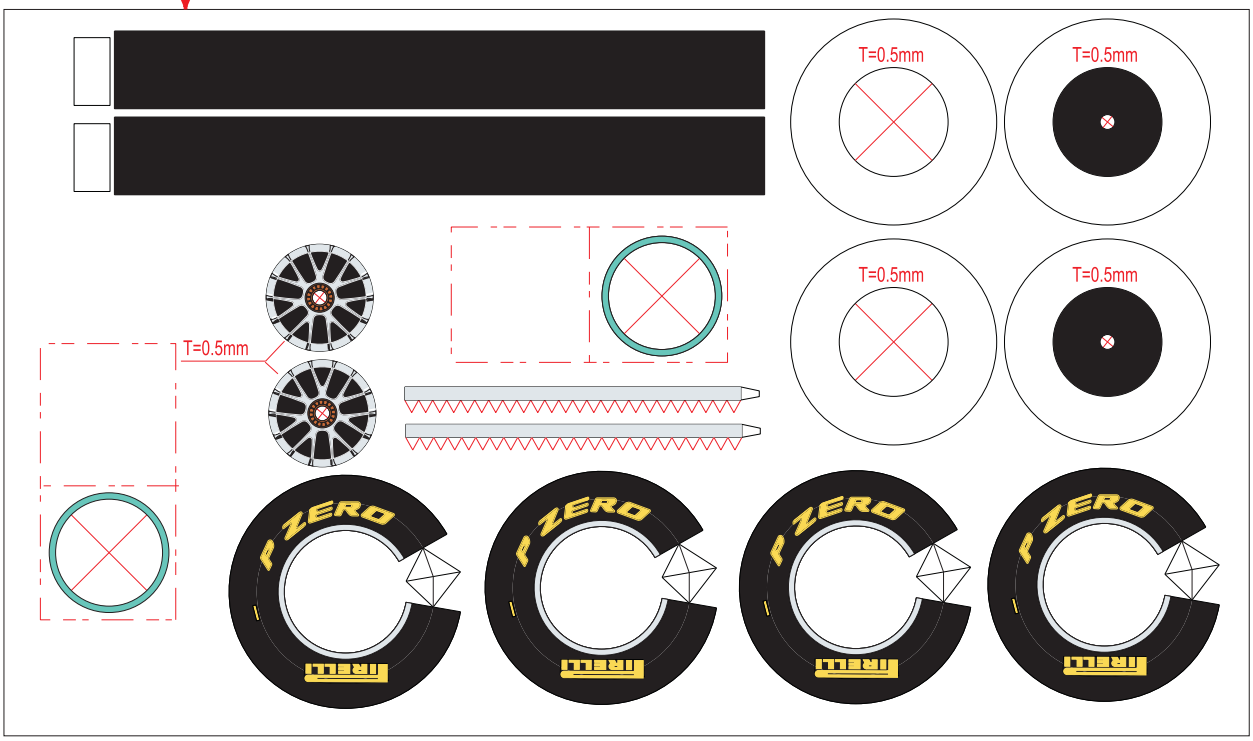
T=0.5mm
T=0.5mm
T=0.5mm
T=0.5mm
T=0.5mm

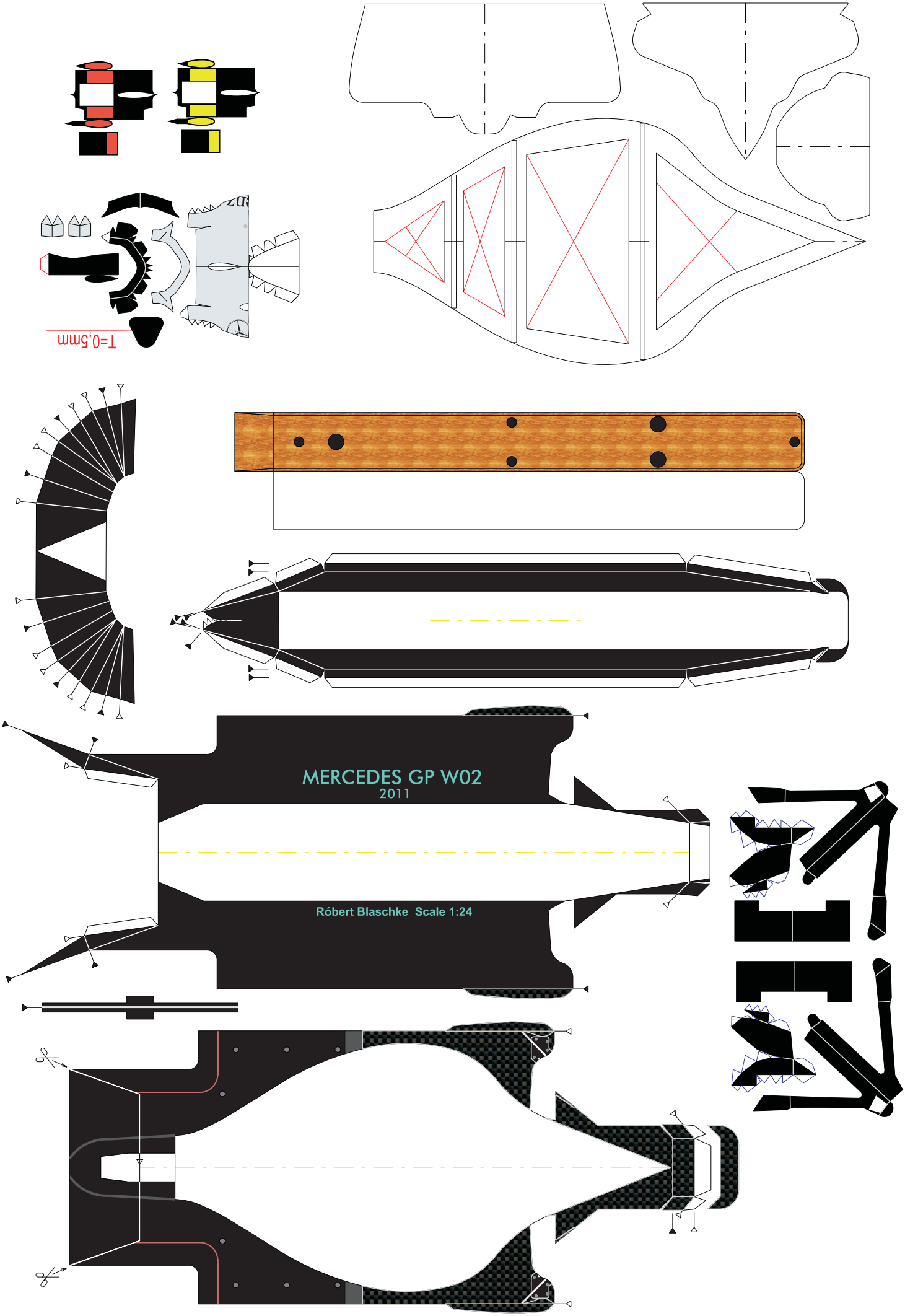
T=0,5mm
MERCEDES GP W02
2011
Róbert Blaschke Scale 1:24

PETRONAS
MALAYSIA
EXPOSTBRIEF
Mercedes-Benz
SCHUMACHER
ROSBERG
HENRIKSEN
RICHARDS
T=1mm
Antonomy
aabar
PIRELLI
PETRONAS
SYNTIUM
Allianz
1mm thick cardboard glue under this tab
Paint Black From Back Side
1mm thick cardboard glue under this part
23
6
2.5

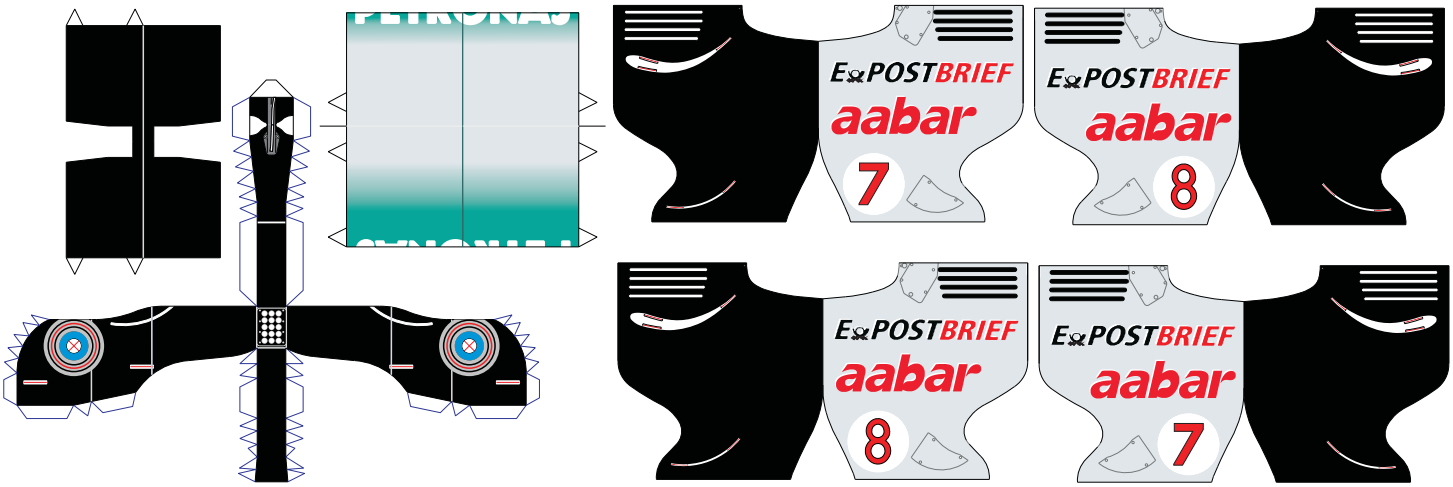
E&POSTBRIEF
aabar
7
E&POSTBRIEF
aabar
8
E&POSTBRIEF
aabar
8
E&POSTBRIEF
aabar
7

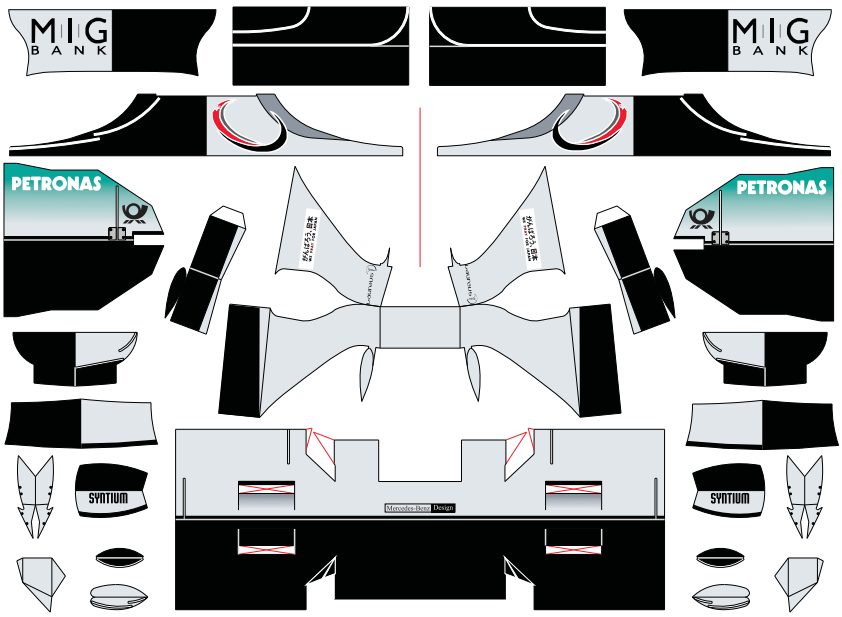
MIG
BANK
MIG
BANK
PETRONAS
PETRONAS
SYNTIUM
SYNTIUM

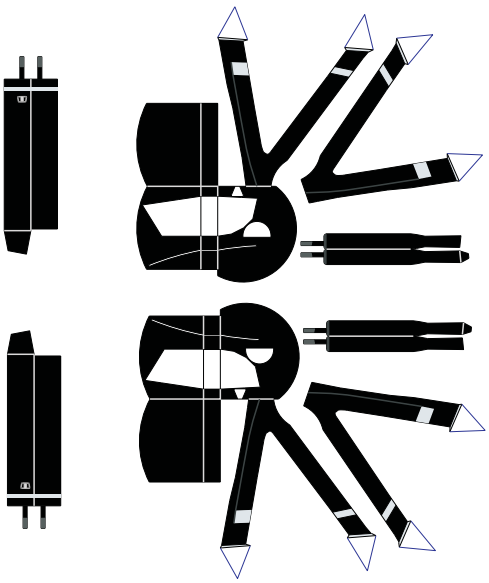

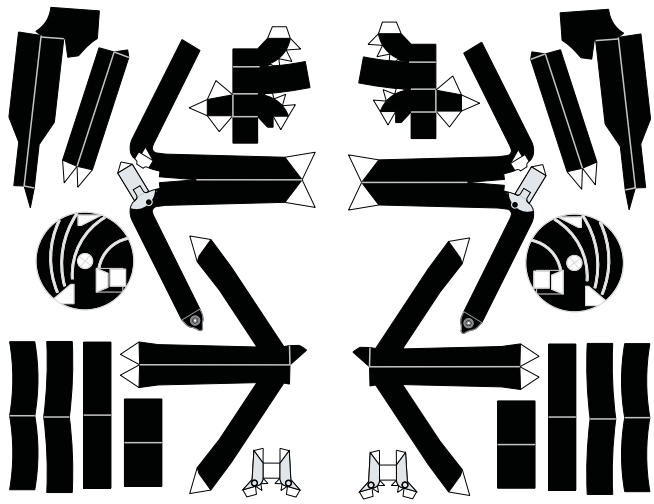

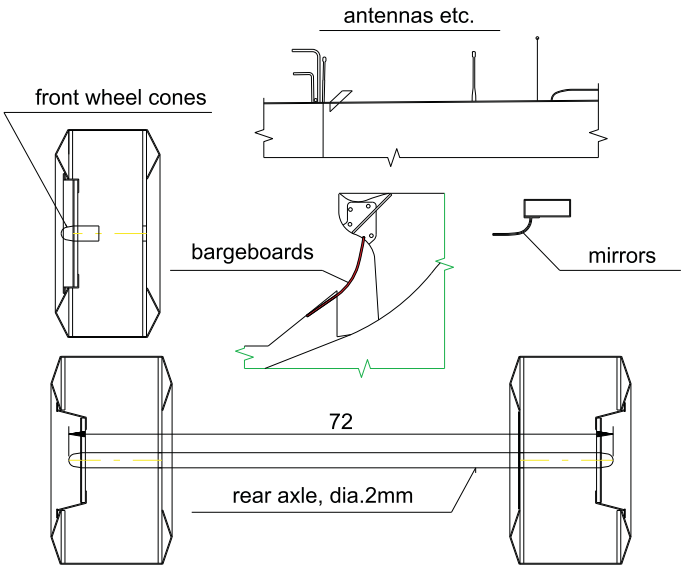
antennas etc.
front wheel cones
bargeboards
mirrors
72
rear axle, dia.2mm

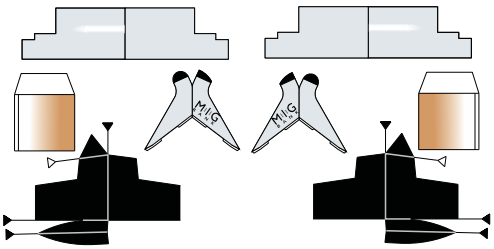

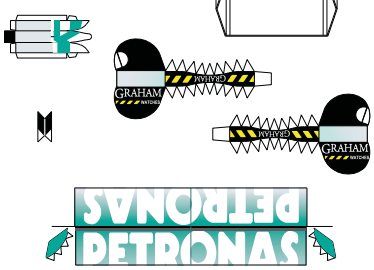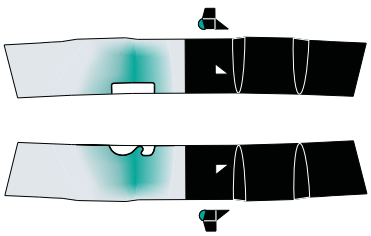
GRAHAM
GRAHAM
PETRONAS